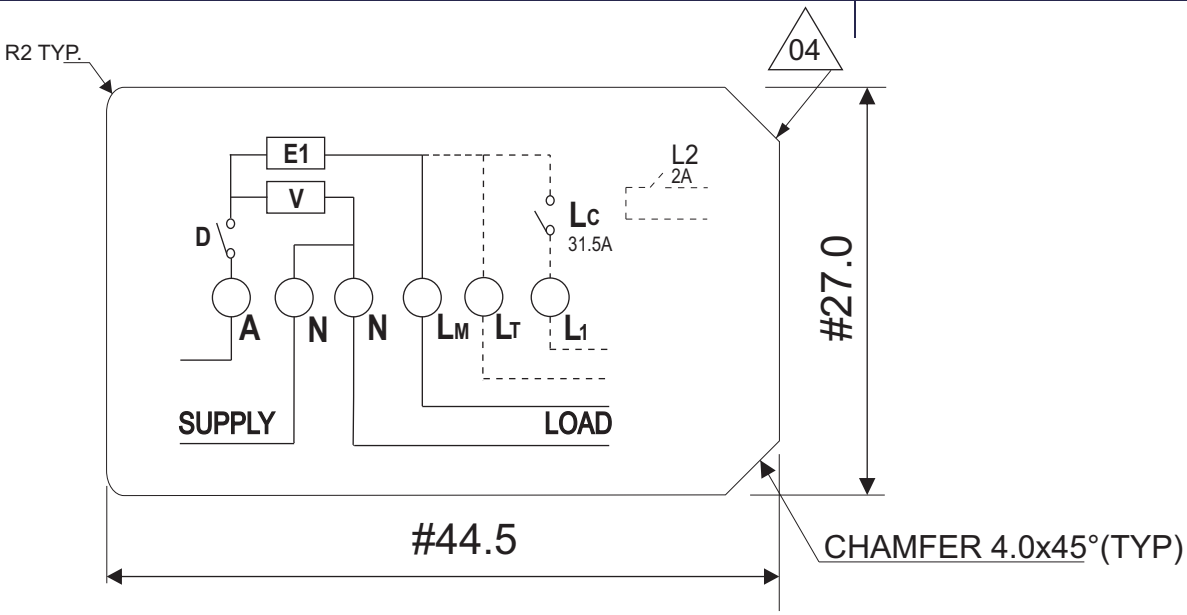


DIMENSION DETAILS

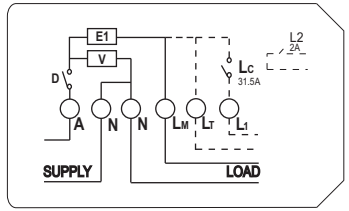


ARTWORK
(SCALE 1:1)

NOTES:-

#1- ADHEISVE : a) TRANSPARENT ADHESIVE (BIRLA 3M) ON PRINTING SIDE. & REMOVABLE WAX PAPER FOR EASY PEEL OFF.
b) TEXT TO BE PRINTED IN REVERSE PATTERN AS THE DECAL WILL BE PASTED ON THE OPAQUE TERMINAL BLOCK COVER
2- ADHESIVE MUST WITHSTAND HOT RUN TEST AT 80°C FOR 8 hrs.
3- PRINTING COLOR : BLACK.
4- OUTER BOUNDARY PRINTING NOT REQUIRED.
5- REFER SOFT FILE FOR ARTWORK.
6- ARTWORK TO BE APPROVED BY SML , PRIOR TO SUPPLY.
7- ALL DIMENSIONS & PARAMETERS MUST BE INSPECTED & REPORT SHOULD BE SUBMITTED WITH SUPPLY.
8- AFTER APPROVAL (#) MARKED DIMENSIONS / PARAMETERS MUST BE INSPECTED & REPORT SHOULD BE SUBMITTED WITH EVERY LOT SUPPLIED.
9- GENERAL TOLERANCE ±0.2mm.

| Rev No. | Date | Revision History (ECR /ECO/DCO/DRN) | Drn.by | Chk.by | Appd. by |
|---|---|---|---|---|---|
| 004 | 29/0914 | REFER "04" FOR MODIFICATION AGAINST ECO05841 | Amit.D | HSN | AKK |
| 003 | 17/07/14 | REFER "03" FOR MODIFICATION AGAINST DCO28522 | Amit.D | HSN | AKK |
| 002 | 12.06.14 | REFER "02" FOR MODIFICATION AGAINST DCO28093 | Amit.D | HSN | RVH |

Volume:-

Material No:- RWF-00014

Material Description:- # PVC film thickness 80±10 microns, color transparent, finish glossy

Finish:-

SH1 OF1

Title : Label for i-Credit 510 ; (connection diagram 1E, disconnect, optional LC and 2A relay)

Drg. no. BGD103-614

C.R. 004

Size (Org.) A4 | Units : mm | Scale : 2:1

NPD-MEC-QF-26
Rev No.001

THIS DOCUMENT IS COPYRIGHT OF SECURE INTERNATIONAL HOLDINGS PTE. LTD. AND SHALL NOT BE DIVULGED, REVEALED, REPRODUCED, COPIED, IN WHOLE OR IN PART, NOR USED FOR ANY PURPOSE OTHER THAN FOR THE SUBMITTED . ASK IN CASE OF ANY DOUBT.

SECURE METERS LIMITED
Engineering Drawing